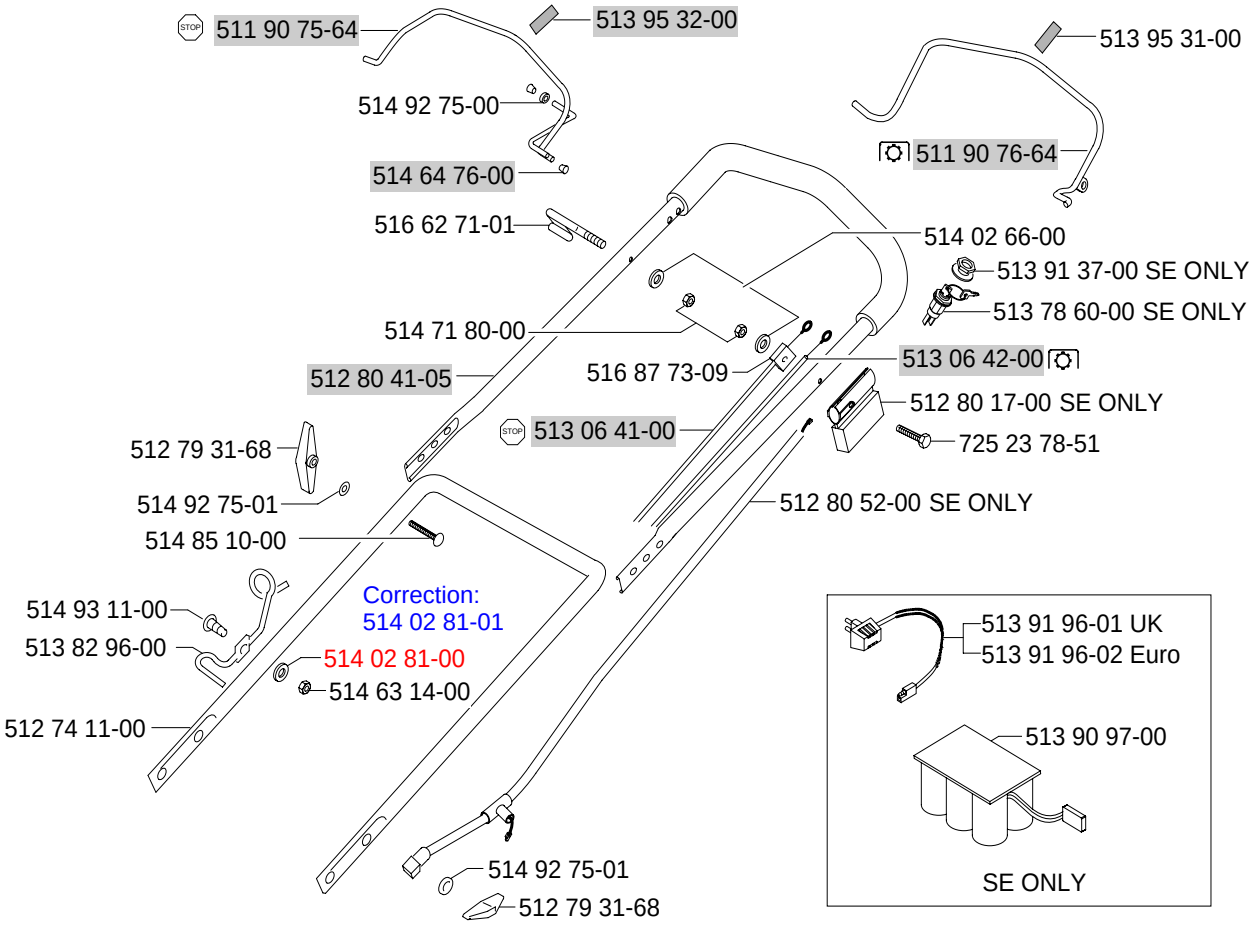
511 90 75-64
513 95 32-00
513 95 31-00
514 92 75-00
511 90 76-64
514 64 76-00
516 62 71-01
514 02 66-00
513 91 37-00 SE ONLY
513 78 60-00 SE ONLY
514 71 80-00
513 06 42-00
512 80 41-05
516 87 73-09
512 80 17-00 SE ONLY
513 06 41-00
725 23 78-51
512 79 31-68
514 92 75-01
512 80 52-00 SE ONLY
514 85 10-00
Correction:
514 02 81-01
514 93 11-00
513 82 96-00
514 02 81-00
514 63 14-00
512 74 11-00
514 92 75-01
512 79 31-68
513 91 96-01 UK
513 91 96-02 Euro
513 90 97-00
SE ONLY

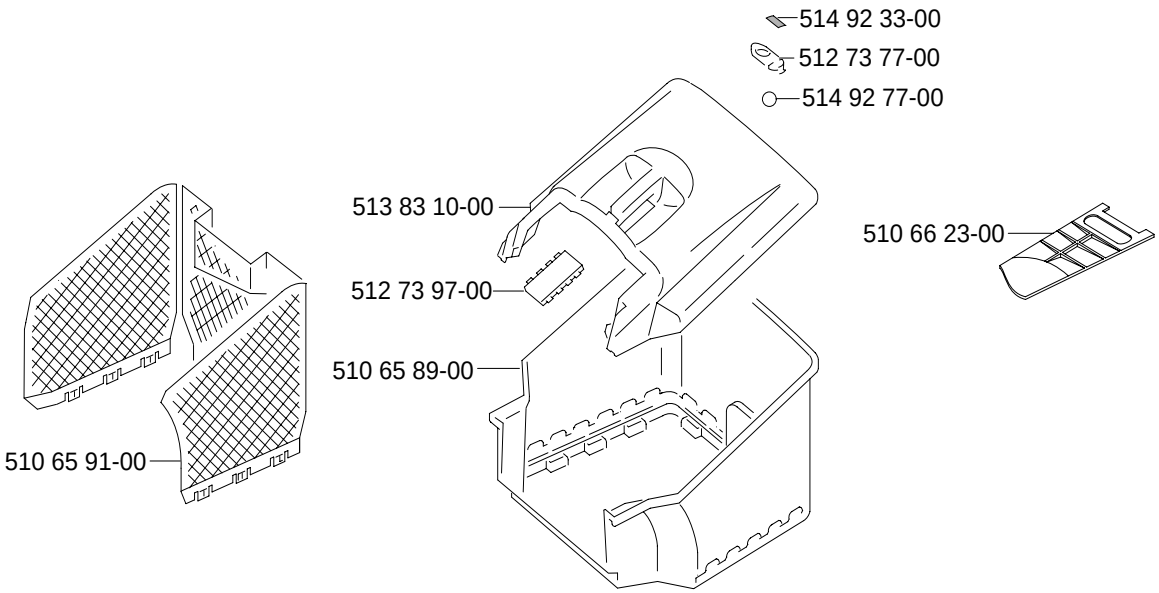
514 92 33-00
512 73 77-00
514 92 77-00
513 83 10-00
510 66 23-00
512 73 97-00
510 65 89-00
510 65 91-00

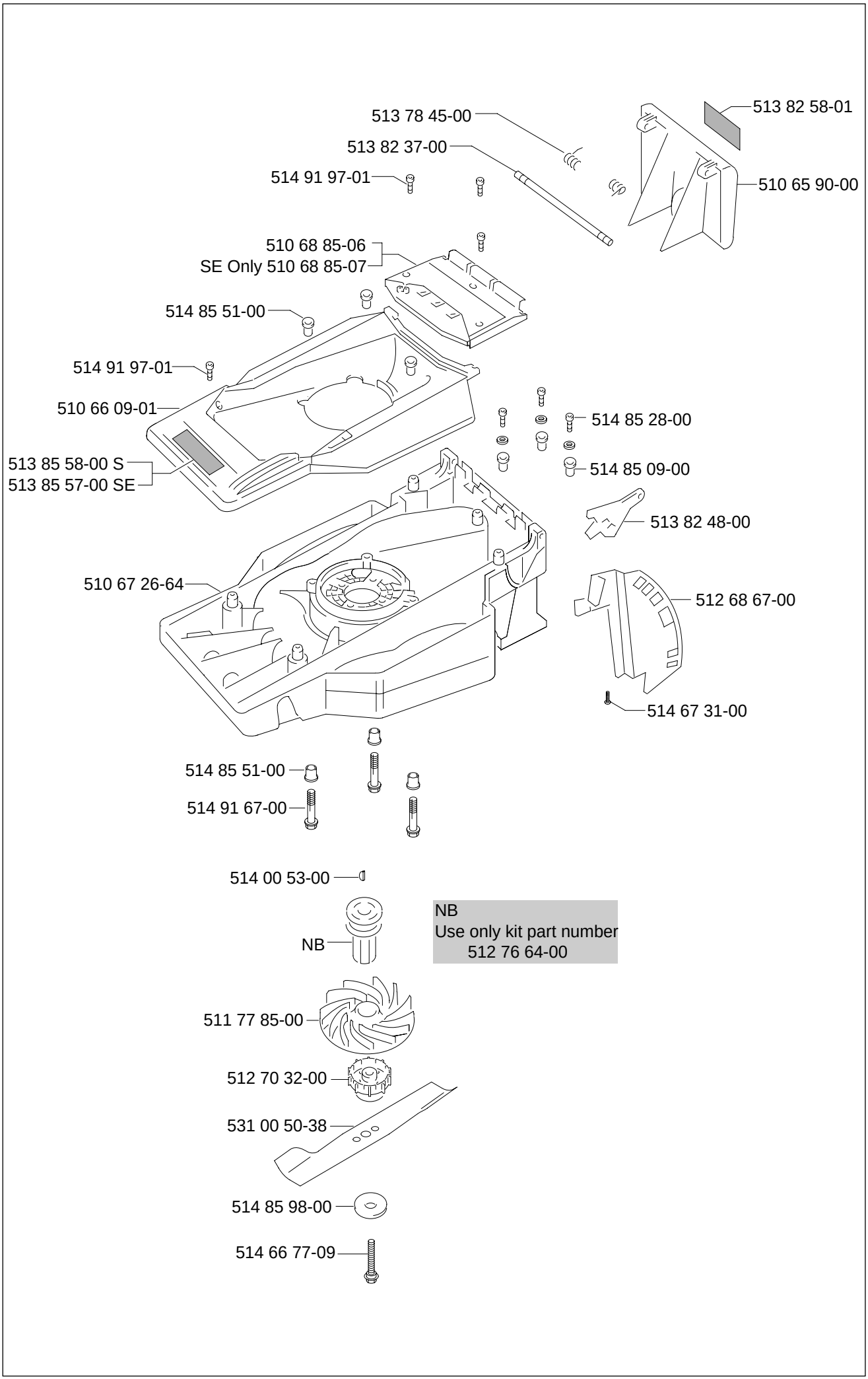
513 78 45-00
513 82 37-00
514 91 97-01
513 82 58-01
510 65 90-00
510 68 85-06
SE Only 510 68 85-07
514 85 51-00
514 91 97-01
510 66 09-01
513 85 58-00 S
513 85 57-00 SE
514 85 28-00
514 85 09-00
513 82 48-00
510 67 26-64
512 68 67-00
514 67 31-00
514 85 51-00
514 91 67-00
514 00 53-00
NB
NB
Use only kit part number
512 76 64-00
511 77 85-00
512 70 32-00
531 00 50-38
514 85 98-00
514 66 77-09

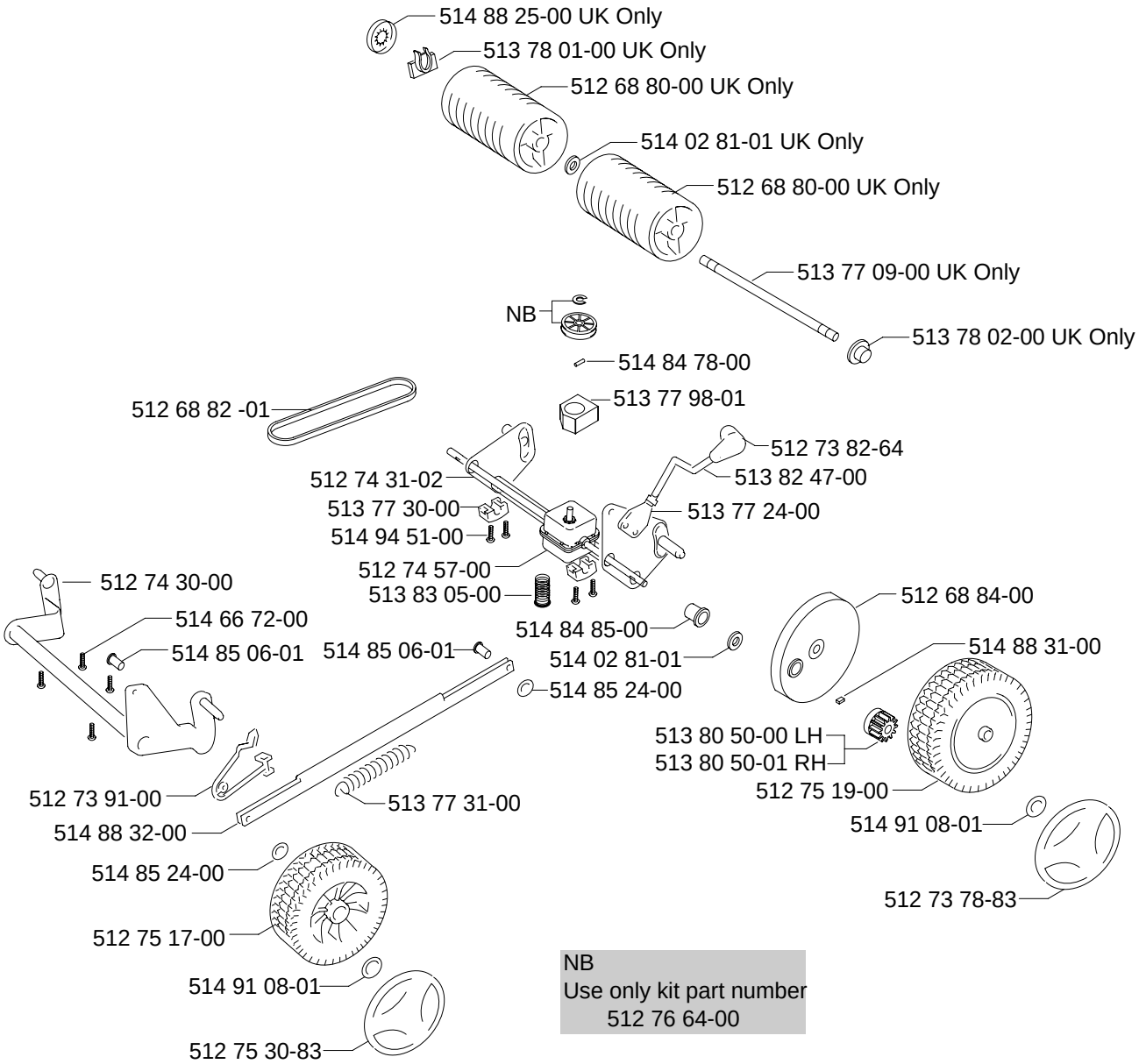

NB
Use only kit part number
512 76 64-00